VHS Series
Static Balancing Valve

Honeywell VHS Series Static Balancing Valves, through operation of a hand wheel, allow setting of Kv value which corresponds to a preset flow rate.

By applying the VHS Series Static Balancing Valves in HVAC system, upon commissioning procedures, maximum flow rate will be accurately set to the water pipelines to achieve static balancing and avoid over or under flow, as such comfortability and energy saving of the system can be enhanced.

Honeywell VHS Series Static Balancing Valves can be installed in main branch pipes or terminal branch pipes of HVAC systems or other hydraulic systems requiring the features.



Features

- **High Kv valves**
  mean lower water resistance in the same designed flow rate to save energy.
- **Compact internal movement structure to reduce space requirement for installation.**
- **Numeric handwheel**
  provides easy operation of the setting and the reading of the preset value during the balancing commissioning process.
- **Self-sealing test ports**
  for differential pressure measurement.
- **Zero leakage and complete close off design**
  provide complete close off of pipework during the commissioning process or system maintenance.
- **Concealed locking on the hand wheel**
  prevents mis-operation after maximum flow rate been set upon balancing commissioning procedure. Hand wheel can only be turned to close off or be turned up to the set maximum flow rate.

Technical Parameters

Pressure level	PN16
Size	DN15 - DN50
Applicable medium	Cold, hot water or glycol solution with a maximum concentration of 50% (water quality standard: GB/T29044-2012)
Medium temperature	-20 to 130°C
Material	Valve body: forged brass Valve stem: forged brass Valve trim: forged brass Sealing: FKM Hand wheel: PA66 + fiberglass
Connection	Threaded (ISO7-1)
Leakage Rate	Zero

Honeywell

Ordering Information and other Technical Parameters

Model Number	DN	Kvs m^3/h	D mm	L mm	H mm	Weight g
VHS16R-015	DN15	3.4	Rp1/2"	80	87.5	677
VHS16R-020	DN20	6.2	Rp3/4"	80	87.5	691
VHS16R-025	DN25	9.7	Rp1"	89	90	815
VHS16R-032	DN32	15.2	Rp1-1/4"	105	100	1108
VHS16R-040	DN40	20.6	Rp1-1/2"	120	107	1494
VHS16R-050	DN50	33.0	Rp2"	140	117	2250

Accessories: VHS-PT Test Port, VHS-HW hand wheel

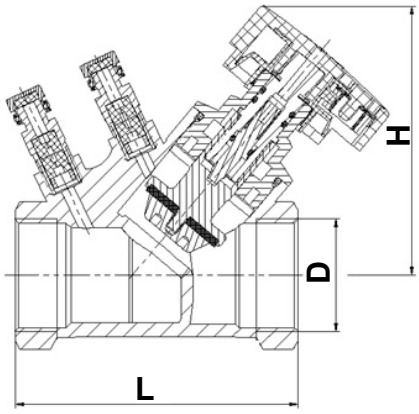

Static Balancing Valve Installation

When installing the VHS series static balancing valves, the water flow direction must be in the same direction of the flow direction arrow on the valve body.

To avoid turbulence flow in the pipe which may affect the performance on the valve, a straight pipe segment with a certain length must be reserved before the inlet and after the outlet of the valve, as shown in the diagram in the right. (2DN = 2 times the pipe diameter)

Note: If the inlet is close to a water pump, reserve a straight pipe segment minimum of ten times the pipe diameter (10DN) to avoid inaccuracy during the balancing commissioning procedure.

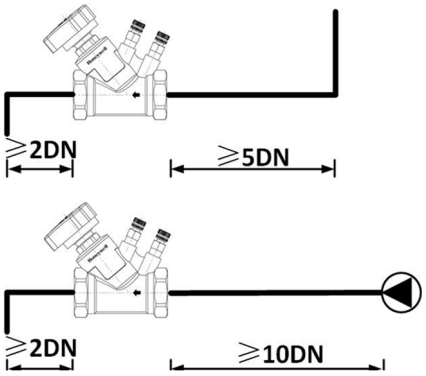

Static Balancing Valve Presetting Method

Preset values (i.e., Kv value and the corresponding hand wheel readings) are achieved by completing the commissioning of the VHS series static balancing valve. Then the hand wheel can be locked so it won't be changed under any circumstance and affect the static balanced achieved.

Setting

1. Shut off the valve. The hand wheel reading is 0.0, as shown in the figure **Closed State**;
2. Open the valve to the preset value. For example, if the preset value is 3.2, then the hand wheel shall be turned in such a way that it matches the reading in the figure **Setting State** (ones digit on the outside, one-tenth digit on the inside).
3. After turning to the preset value, insert the hexagonal key (3mm) into the socket in the center of the hand wheel and turn clockwise to lock, as shown in the Locked State.

Check the Setting

After the setting is completed, you need to check the setting values:

1. Shut off the valve. The hand wheel reading should be 0.0, as shown in the figure **Closed State**;
2. Turn the hand wheel to the maximum. The hand wheel should read the preset value 3.2, as shown in the figure Set State.

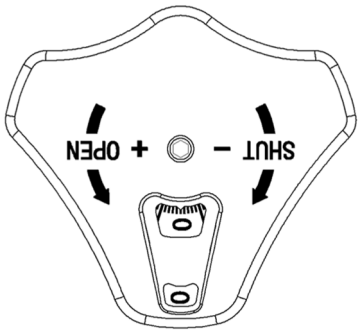

Closed State
The shown hand wheel reading is 0.0 turn

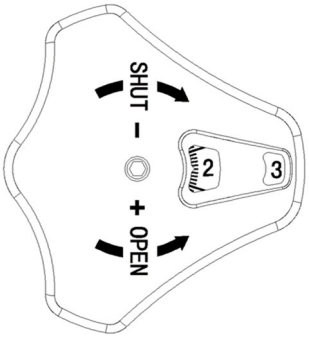

Setting State
The shown preset value is 3.2 turns

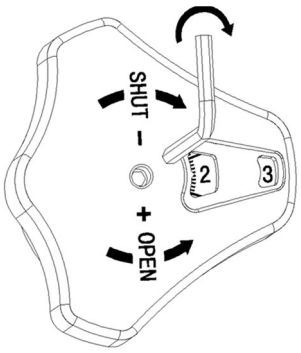

Locked State
The shown preset value is 3.2 turns

Flow Coefficient Diagram

The flow coefficient diagram can be used to select the appropriate static balancing valve and to determine the flow rates and pressure difference with different openings and the same preset values.

Selection and determination of preset values: The Kv value can be determined as the value where the line connecting the flow rate and the pressure difference intersects with the Kv axis. The diameter of the valve and its preset value (hand wheel turns) can be determined as the value where the horizontal line through the above Kv value intersects with the axes of preset values (turns) for different valve diameters.

Determination of flow rate and pressure difference: After the valve diameter and preset value (hand wheel turns) are determined, the Kv value can be determined. The pressure difference can then be determined as the value where the line originating from a known flow rate and passing through the determined Kv value intersects with the pressure difference axis, and vice versa.

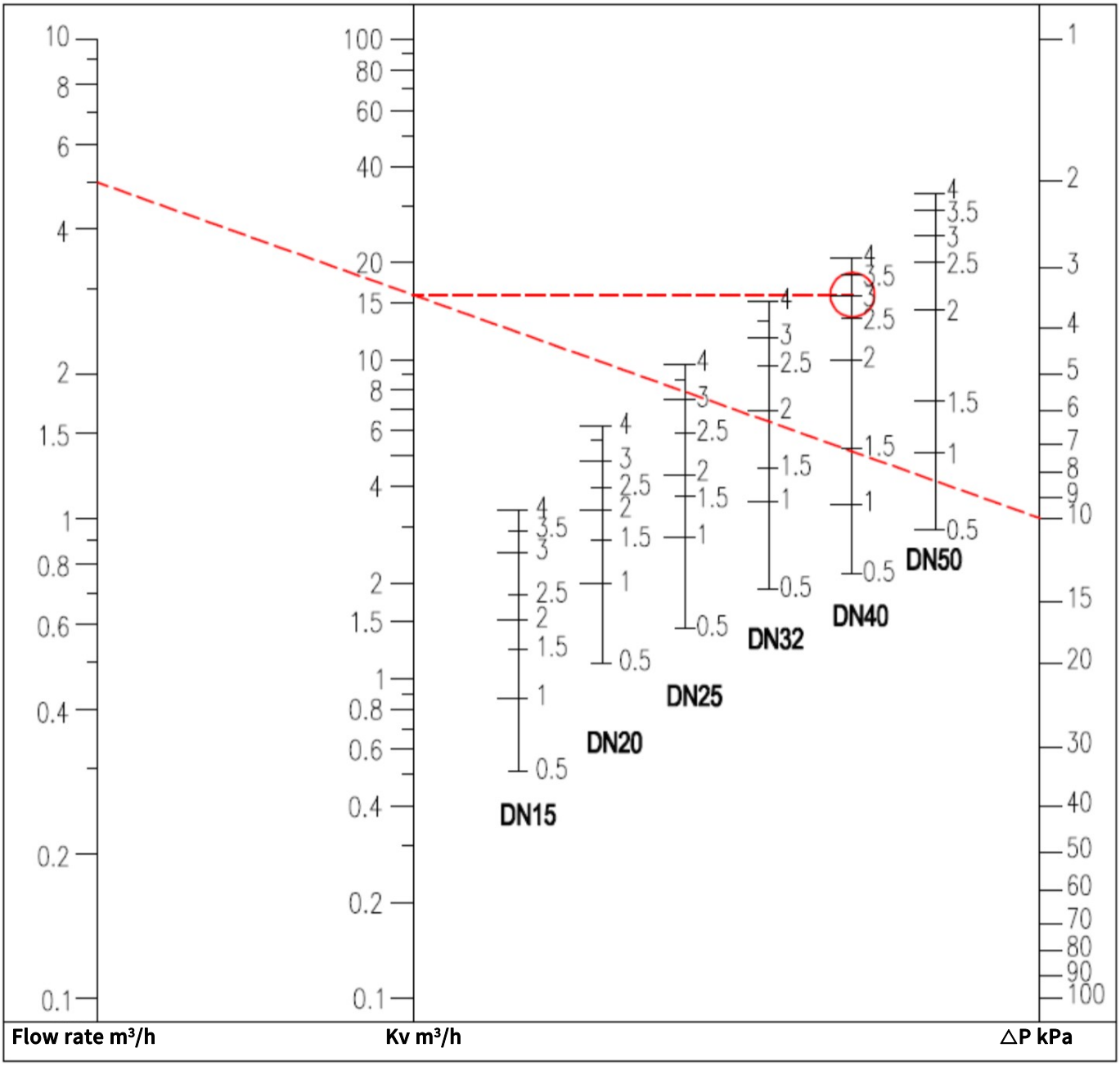

Honeywell Environmental and Combustion Controls (Tianjin) Co., Ltd.
No. 158, Nanhai Road, Tianjin Economic-Technological Development Area
Postal Code: 300457
Tel: +86-22-66287000
Fax: +86-22-25325214

HBT-FDA-BV01-APRIL-2020-V01-EN
© 2020 Honeywell, all rights reserved.
These documents are subject to change without further notice.

THE FUTURE IS WHAT WE MAKE IT

Honeywell