Honeywell
THE POWER OF CONNECTED

Field Device

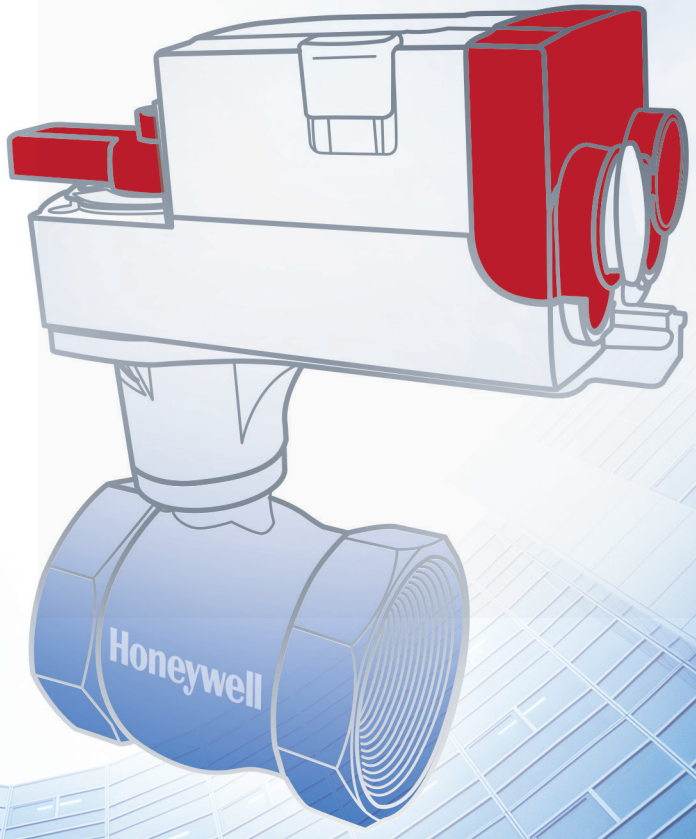

Control Ball Valve

VBA16P, VBA16F and MVN Series

VBA16P-Series

Two-way control ball valve

Features

- Equal percentage flow characteristic
- Low leakage rate
- Low driving torque
- Stainless steel ball and stem
- Straight through flow with reduced flow resistance
- High flow capacity

Specifications

- Size DN20-80
- Nominal pressure PN16
- Flow characteristics Equal percentage
- Rangeability 100:1
- Leakage rate ≤0.01% Kvs of (ANSI/FCI 70-2 Class IV)
- Threaded connection BSPP
- Medium Hot and cold water or neutral liquid
- Medium temperature -5...120°C

Material

- Valve body Brass HPb59-1
- Cap Brass HPb59-1
- Seat PTFE
- Ball Stainless steel
- Stem Stainless steel
- Sealing ring FPM

Overview

The VBA16P-series of two-way control ball valves can be used in the HVAC water systems of commercial and public buildings to achieve modulating or On/Off control

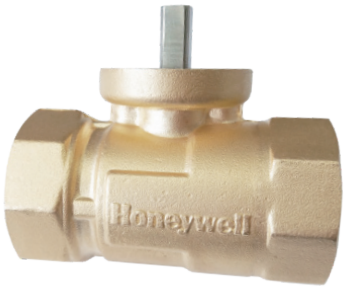

DN20-DN50



DN65-DN80

KVs and close-off pressure

Size (mm)	Model	Flow coefficient Kvs(m^3/h)	Close-off pressure (KPa)	Actuator torque (N•m)
20	VBA16P020	6.3	1600	5(MVN..05..)
25	VBA16P025	10	1600	5(MVN..05..)
32	VBA16P032	16	1600	5(MVN..05..)
40	VBA16P040	26	1600	10(MVN..10..)
50	VBA16P050	41	1600	10(MVN..10..)
65	VBA16P065	51	1600	20(MVN..20)
80	VBA16P080	81	1600	20(MVN..20)

Structure

DN20-DN50

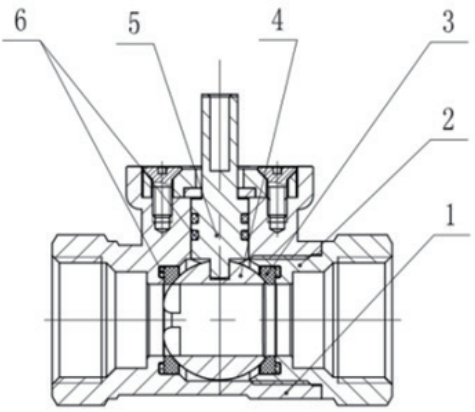

No.	Name	Material
1	Valve body	Brass HPb59-1
2	Cap	Brass HPb59-1
3	Seat	PTFE
4	Ball	Stainless Steel
5	Stem	Stainless Steel
6	Sealing ring	FPM

DN65-DN80

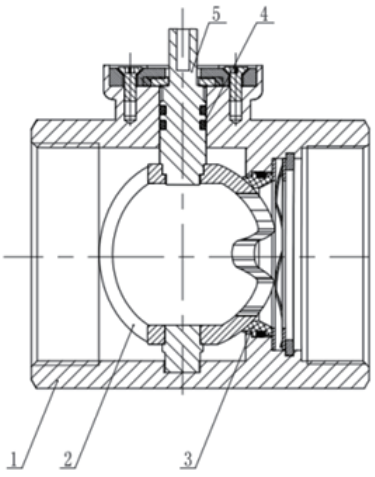

No.	Name	Material
1	Valve body	Brass HPb59-1
2	Ball	Stainless Steel
3	Seat	PTFE
4	Sealing ring	FPM
5	Stem	Stainless Steel

VBA16F-Series

Two-way control ball valve

Features

- Equal percentage flow characteristic
- Low leakage rate
- Low driving torque
- Stainless steel ball and stem
- V-shaped ball
- High flow capacity



Specification

- Size DN65~DN150
- Nominal pressure PN16
- Flow characteristic Equal percentage
- Rangeability 50:1
- Leakage rate ≤0.01% of Kvs
- Flange connection ISO7005-2
- Medium Water or neutral Liquid
- Medium temperature -5 ... 120 °C

Material

- Valve body Ductile iron QT450-10
- Ball Stainless steel
- Stem Stainless steel
- Seat PTFE

Structure

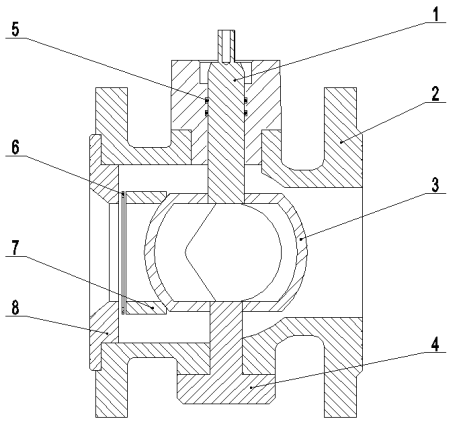

KVs and close-off pressure

Size (mm)	Model	Flow coefficient Kvs	Close-off pressure (kPa)	Actuator torque (Nm)
65	VBA16F065	68	700	20(MVN..20)
80	VBA16F080	100	700	20(MVN..20)
100	VBA16F100	160	700	34(MVN..34)
125	VBA16F125	250	700	34(MVN..34)
150	VBA16F150	360	400	34(MVN..34)

No.	Name	Material
1	Stem	Stainless Steel
2	Valve body	Ductile iron QT450-10
3	Ball	Stainless Steel
4	Bottom cover	Carbon steel
5	O-ring	FPM
6	Spring	Stainless Steel
7	Seat	PTFE
8	Gland nut	Ductile iron QT450-10

MVN-Series Ball Valve Actuator

Features

- Designed to be used with VBA16P and VBA16F Series Ball Valves
- Mounting bracket included and pre-installed for easy field installation
- Can connect to external auxiliary switch
- Overload protection

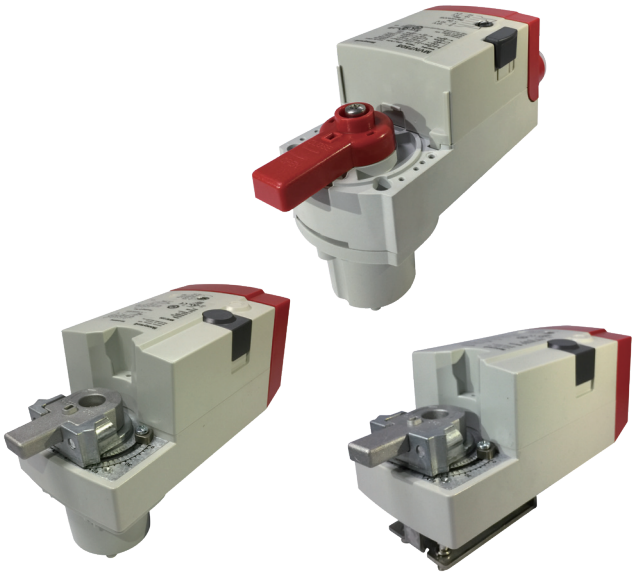

Technical parameters

- Direction of rotation — Adjustable
- Level of protection — IP54
- Working conditions — operating temperature -20~60 °C; storage temperature -30~80 °C
- CE — MVN75../72../61..

Model	Torque (Nm)	Control signal	Working power supply	Control mode	Running time	Power consumption	Internal auxiliary switch	Weight (Kg)
MVN6105	5	On-Off	24Vac/dc	Floating/On-Off	90s	5VA		0.51
MVN6105-A	5	On-Off	24Vac/dc	Floating/On-Off	90s	5VA	2 pcs (fixed)	0.52
MVN4605	5	On-Off	230V ac	On-Off	65s-110s	23VA		0.51
MVN7505	5	0(2)~10V	24Vac/dc	Modulating/Floating/On-Off	110s	5VA		0.51
MVN6110	10	On-Off	24Vac/dc	Floating/On-Off	90s	5VA		0.51
MVN6110-A	10	On-Off	24Vac/dc	Floating/On-Off	90s	5VA	2 pcs (fixed)	0.52
MVN4610	10	On-Off	230V ac	On-Off	65s-110s	23VA		0.51
MVN7510	10	0(2)~10V	24Vac/dc	Modulating/Floating/On-Off	110s	5VA		0.51
MVN6120	20	On-Off	24Vac/dc	Floating/On-Off	95s~110s	8VA		1.45
MVN4620	20	On-Off	230V ac	Floating/On-Off	95s~110s	10VA		1.45
MVN7220	20	0(2)~10V	24Vac/dc	Modulating/Floating/On-Off	95s~110s	8VA		1.45
MVN6134	34	On-Off	24Vac/dc	Floating/On-Off	95s~110s	10VA		1.59
MVN4634	34	On-Off	230V ac	Floating/On-Off	95s~110s	13VA		1.59
MVN7234	34	0(2)~10V	24Vac/dc	Modulating/Floating/On-Off	95s~110s	10VA		1.59

External auxiliary switch

- SW2-CN/SSW2-CN

Parameters

- SSW2-CN: 2*SPDT, AC110V/230V, and 5A (resistive)/3A (inductive) are applied to the MVN Series 5 Nm and 10 Nm torque actuators
- SW2-CN: 2*SPDT, AC110/230V, and 5A (resistive)/3A (inductive) are applied to the MVN Series 20 Nm and 34 Nm torque actuators

Wiring Diagram

MVN7505/ MVN7510

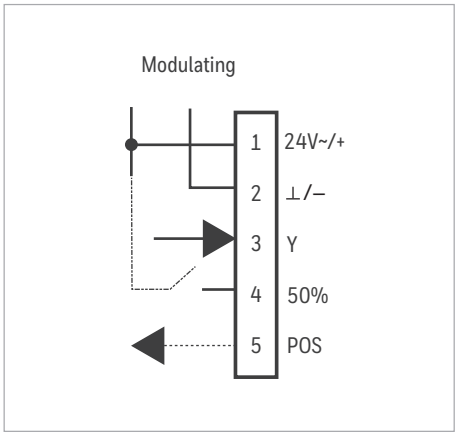

MVN7220/MVN7234

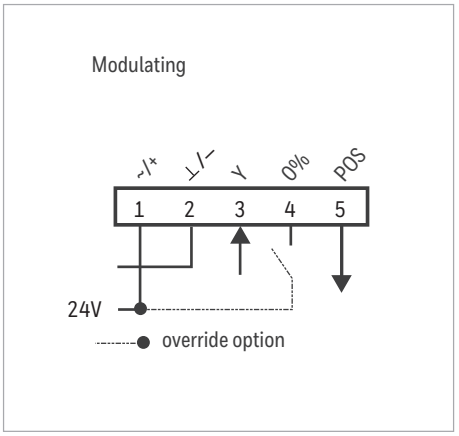

MVN6105../MVN6110..

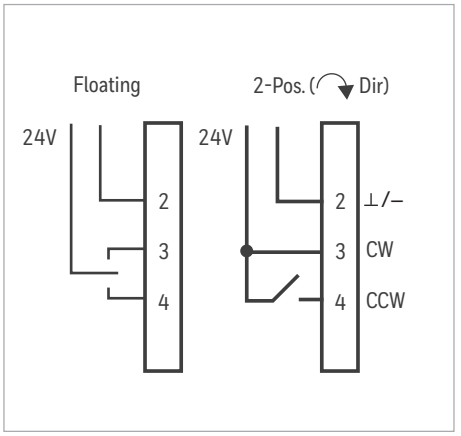

MVN6120/MVN6134

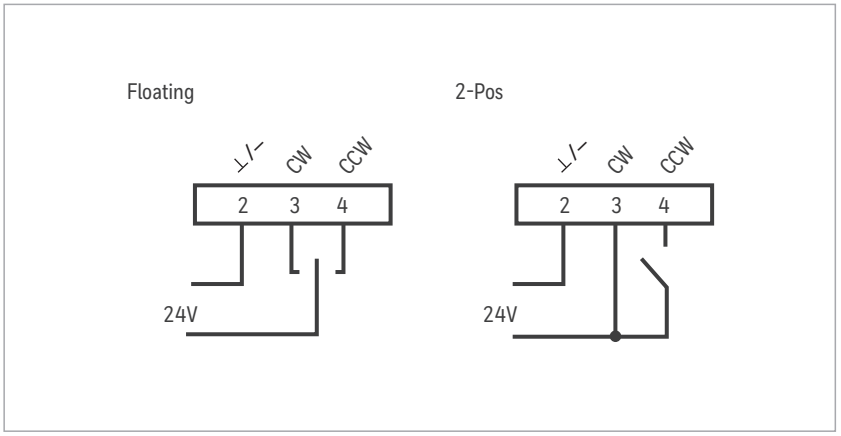

MVN4605../MVN4610..

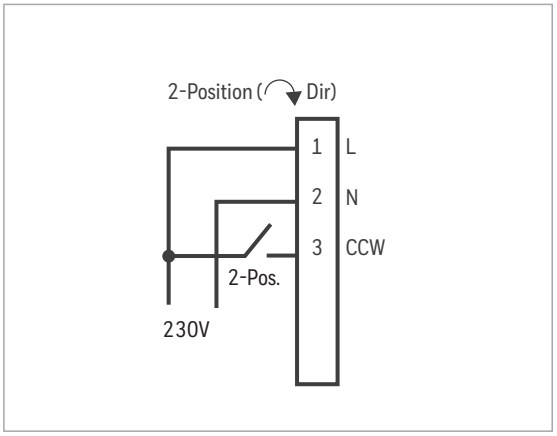

MVN4620/MVN4634

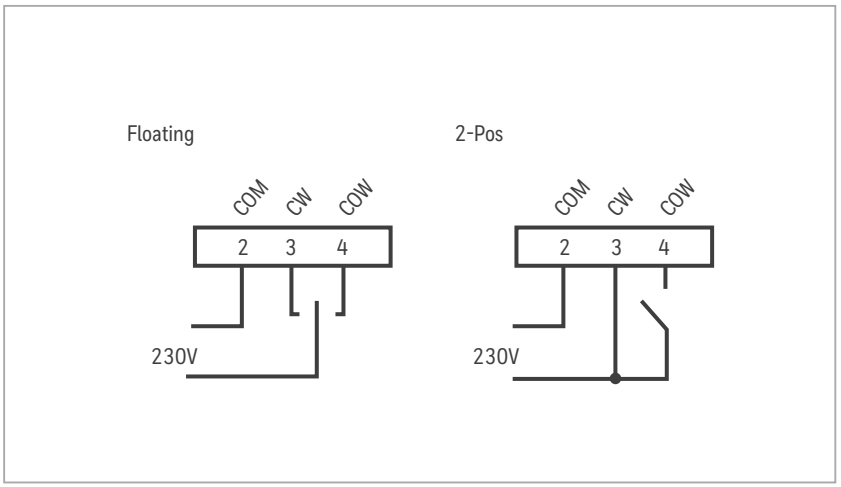

Auxiliary switch (..-A)

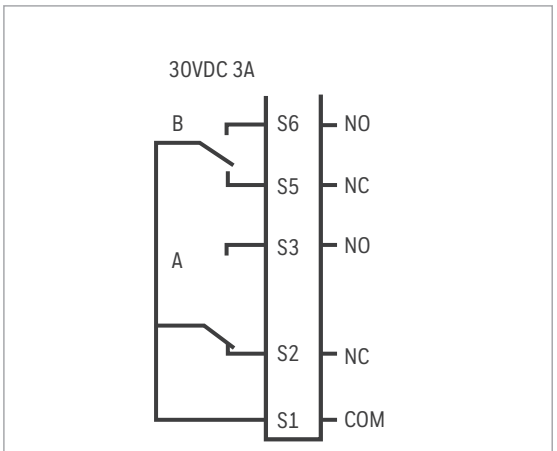

Dimensions (mm)

VBA16P-Series

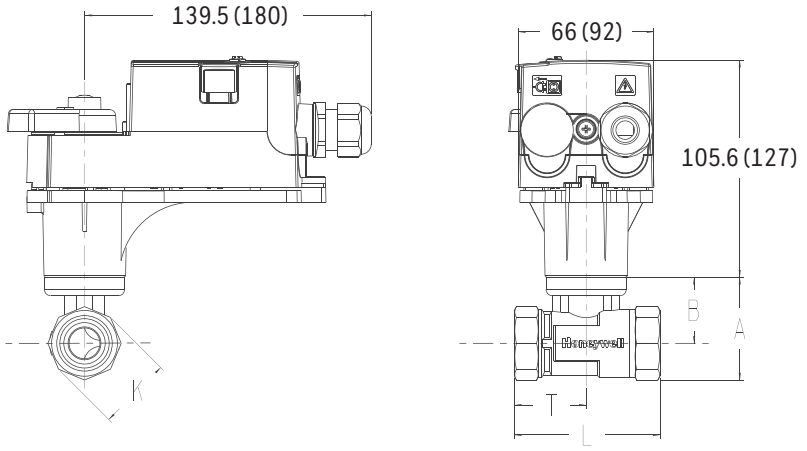

Description:
The numbers in brackets are the sizes of the 20Nm actuator.

Model#	DN		L	T	K	B	A	Weight (Kg)
	mm	In						
VBA16P020	20	¾	71	35.5	35.7	32.2	50	0.39
VBA16P025	25	1	78	39	45	34	56.5	0.56
VBA16P032	32	1 ¼	88	44	53	38.5	65	0.74
VBA16P040	40	1 ½	104	52	60	49	79	1.18
VBA16P050	50	2	120	60	75	52.5	90	1.96
VBA16P065	65	2 ½	115	63.5	91.5	63.8	109.5	2.08
VBA16P080	80	3	130	85	107	73	126.5	3.19

VBA16F-Series

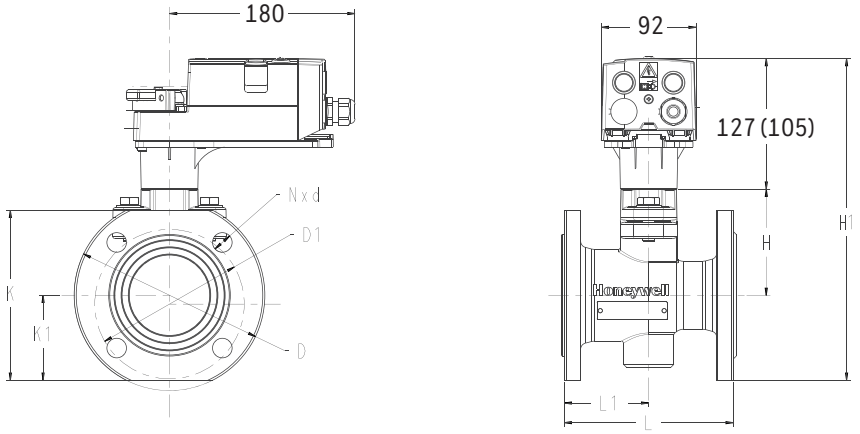

Description:
The numbers in brackets are the sizes of the 34Nm actuator.

Model	DN		L	L1	K	K1	D	D1	H	H1	N* Ø E	Weight (Kg)
	mm	In										
VBA16F065	65	2-1/2	170	85	165	82.5	185	145	103	312.5	4*19	11
VBA16F080	80	3	180	90	182	91	200	160	118	336	8*19	12.5
VBA16F100	100	4	190	95	200	100	220	180	130	357	8*19	15.5
VBA16F125	125	5	200	120	230	115	250	210	145	365	8*19	20.5
VBA16F150	150	6	210	130	265	132.5	285	240	163	400.5	8*23	26

More information

website: www.honeywell.com

Honeywell Home and Building Technologies

Shanghai Office
Building 1, No. 555 Huanke Road, Zhangjiang High-Tech Park, Pudong New Area,
Shanghai, China
Tel: 86 21 80386800
Fax: 86 21 60246074

2018-GCB-FD-BV-Jun2018-EN-1
© 2018 Honeywell International Inc.

Honeywell