V5011B2 SERIES

Two-way threaded linear valve

PRODUCT OVERVIEW

The V5011B2 series two-way threaded linear valve can be connected with ML74/ML64/ML88 series valve actuators, and is widely used in hot and cold water control of HVAC systems.



FEATURES

- Low leakage rate
- Accurate positioning of valve stem to ensure temperature control
- Long service life
- Without accessories, it can be quickly installed with actuators

TECHNICAL PARAMETER	
SPECIFICATIONS	
Nominal pressure rating	PN16
Valve size	DN15 – DN50
Flow characteristic	Equal percentage
Leakage rate	≤0.01% of Kvs
Rangeability	50:1
Applied medium	Hot and cold water
Medium temperature	Water：-15~130°C
Stroke	20mm±1
Material	Valve body: brass Valve stem: stainless steel Valve plug: stainless steel
Connection	Screw thread
Action direction	The valve stem down to close

V5011B2 SERIES

Two-way threaded linear valve

ORDER INFORMATION AND TECHNICAL PARAMETERS

VALVE SPECIFICATIONS			ACTUATOR CLOSE-OFF PRESSURE（kPa）	
Order Number	Valve size	Kvs(m^3/h)	600N (ML6420A3007-E / ML7420A8088-E / ML8824A0620 / ML7425A8018-E)	1800N (ML7421A8035-E / ML8824A1820)
V5011B2W015	DN15	4	1600kPa	1600kPa
V5011B2W020	DN20	6.3	1600kPa	1600kPa
V5011B2W025	DN25	10	800kPa	1600kPa
V5011B2W032	DN32	16	500kPa	1600kPa
V5011B2W040	DN40	25	350kPa	950kPa
V5011B2W050	DN50	40	220kPa	630kPa

DIMENSIONS (mm)

Valve size	A	B	Y1 Stem down	Weight kg
DN15	83	162.5	87.5	0.9
DN20	83	162.5	87.5	0.9
DN25	103	173	87.5	1.2
DN32	106	176	87.5	1.5
DN40	120	184	87.5	1.8
DN50	134	193	87.5	2.4

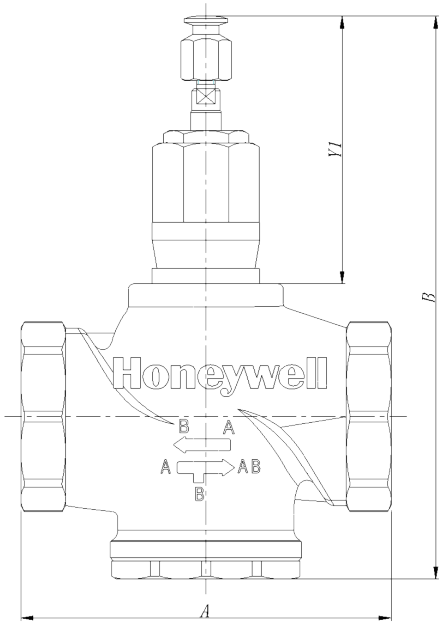

INSTALLATION

- Water should meet GB/T 29044-2012 water quality requirements of heating and air conditioning system.
- Flow direction must correspond with the arrow direction on the valve body.
- Do not install valve with stem below the horizontal.
- The installation of a strainer is strongly recommended.

V5011B3 SERIES

Three-way threaded linear valve

PRODUCT OVERVIEW

The V5011B3 series three-way threaded linear valve can be connected with ML74/ML64/ML88 series valve actuators, and is widely used in hot and cold water control of HVAC systems.

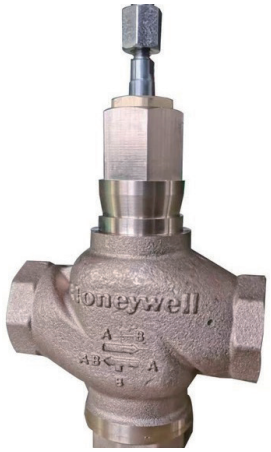

FEATURES

- Low leakage rate
- Accurate positioning of valve stem to ensure temperature control
- Long service life
- Without accessories, it can be quickly installed with actuators

TECHNICAL PARAMETER	
SPECIFICATIONS	
Nominal pressure rating	PN16
Valve size	DN15 – DN50
Flow characteristic	A-AB Equal percentage ; B-AB Linear
Leakage rate	A-AB ≤0.01% of Kvs; B-AB ≤0.02% of Kvs
Rangeability	50:1
Applied medium	Hot and cold water
Medium temperature	Water：-15~130°C
Stroke	20mm±1
Material	Valve body: brass Valve stem: stainless steel Valve plug: stainless steel
Connection	Screw thread
Action direction	The valve stem down to close

V5011B3 SERIES

Three-way threaded linear valve

ORDER INFORMATION AND TECHNICAL PARAMETERS

VALVE SPECIFICATIONS			ACTUATOR CLOSE-OFF PRESSURE（kPa）	
Order Number	Valve size	Kvs(m^3/h)	600N (ML6420A3007-E / ML7420A8088-E / ML8824A0620 / ML7425A8018-E)	1800N (ML7421A8035-E / ML8824A1820)
V5011B3W015	DN15	4	1600kPa	1600kPa
V5011B3W020	DN20	6.3	1600kPa	1600kPa
V5011B3W025	DN25	10	800kPa	1600kPa
V5011B3W032	DN32	16	500kPa	1600kPa
V5011B3W040	DN40	25	350kPa	950kPa
V5011B3W050	DN50	40	220kPa	630kPa

DIMENSIONS (mm)

Valve size	A	B	Y1 Stem down	Weight kg
DN15	83	174	87.5	1.0
DN20	83	174	87.5	1.0
DN25	103	184	87.5	1.3
DN32	106	189	87.5	1.7
DN40	120	198	87.5	2.1
DN50	134	208	87.5	2.9

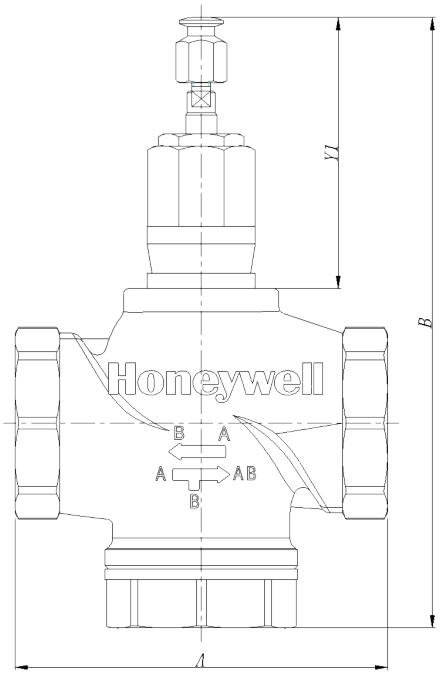

INSTALLATION

- Water should meet GB/T 29044-2012 water quality requirements of heating and air conditioning system.
- Flow direction must correspond with the arrow direction on the valve body.
- Do not install valve with stem below the horizontal.
- The installation of a strainer is strongly recommended.

V5011S2 SERIES

Two-way threaded linear valve

PRODUCT OVERVIEW

The V5011S2W series two-way threaded linear valve can be connected with ML74/ML64/ML88 series valve actuators, and is widely used in hot and cold water control of HVAC systems. The V5011S2S series two-way threaded linear valve can be connected with ML88 series valve actuators, and is widely used in steam humidification control.



FEATURES

- Low leakage rate
- Accurate positioning of valve stem to ensure temperature control
- Long service life
- Without accessories, it can be quickly installed with actuators

TECHNICAL PARAMETER	
SPECIFICATIONS	
Nominal pressure rating	PN20
Valve size	DN15 – DN50
Flow characteristic	Equal percentage
Leakage rate	≤0.01% of Kvs
Rangeability	50:1
Applied medium	Hot and cold water, saturated steam
Medium temperature	Water: -25~130°C Steam: -25~180°C
Stroke	DN15-DN20：10mm DN25：15mm DN32-DN50：20mm
Material	Stem Valve plug: stainless steel
Connection	Screw thread（ISO7-1）
Action direction	The valve stem down to close

INSTALLATION

- Water should meet GB/T 29044-2012 water quality requirements of heating and air conditioning system.
- Flow direction must correspond with the arrow direction on the valve body.
- Do not install valve with stem below the horizontal.
- The installation of a strainer is strongly recommended.

V5011S2 SERIES

Two-way threaded linear valve

ORDER INFORMATION AND TECHNICAL PARAMETERS

VALVE SPECIFICATIONS				ACTUATOR CLOSE-OFF PRESSURE（kPa）	
Order Number	Valve size	Medium	Kvs(m^3/h)	600N	1800N
V5011S2W015	DN15	Water	4	1100 (ML6420A3007-E ML7420A8088-E ML8824A0620 ML7425A8018-E)	1600 (ML7421A8035-E ML8824A1820)
V5011S2S015	DN15	Steam	4	1100 (ML8824A0620)	1600 (ML8824A1820)
V5011S2W020	DN20	Water	6.3	1100 (ML6420A3007-E ML7420A8088-E ML8824A0620 ML7425A8018-E)	1600 (ML7421A8035-E ML8824A1820)
V5011S2S020	DN20	Steam	6.3	1100 (ML8824A0620)	1600 (ML8824A1820)
V5011S2W025	DN25	Water	10	780 (ML6420A3007-E ML7420A8088-E ML8824A0620 ML7425A8018-E)	1600 (ML7421A8035-E ML8824A1820)
V5011S2S025	DN25	Steam	10	780 (ML8824A0620)	1600 (ML8824A1820)
V5011S2W032	DN32	Water	16	500 (ML6420A3007-E ML7420A8088-E ML8824A0620 ML7425A8018-E)	1600 (ML8824A1820)
V5011S2S032	DN32	Steam	16	500 (ML8824A0620)	1600 (ML8824A1820)
V5011S2W040	DN40	Water	25	300 (ML8824A0620)	950 (ML8824A1820)
V5011S2S040	DN40	Steam	25	300 (ML8824A0620)	950 (ML8824A1820)
V5011S2W050	DN50	Water	40	200 (ML8824A0620)	630 (ML8824A1820)
V5011S2S050	DN50	Steam	40	200 (ML8824A0620)	630 (ML8824A1820)

Note: the V5011S2S steam valve needs to be matched with ML88 actuator (high temperature components are not required)

DIMENSIONS (mm)

Valve size	A	B	Y1 Stem down	Weight kg
DN15	83	139.5	87	0.59
DN20	83	144	87	0.63
DN25	103	160	87	1.03
DN32	120	168.5	87	1.32
DN40	130	177	87	1.75
DN50	150	195.5	87	2.43

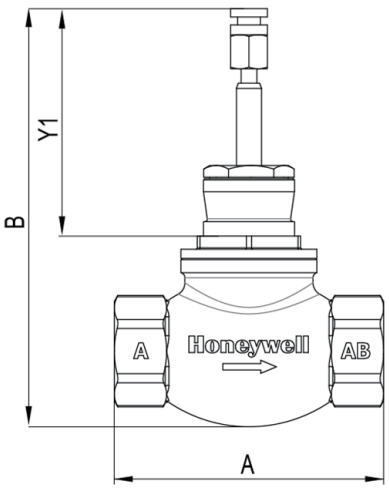

V5011S3 SERIES

Three-way threaded linear valve

PRODUCT OVERVIEW

The V5011S3W series three-way threaded linear valve can be connected with ML74/ML64/ML88 series valve actuators, and is widely used in hot and cold water control of HVAC systems. The V5011S3S series three-way threaded linear valve can be connected with ML88 series valve actuators, and is widely used in steam humidification control.



FEATURES

- Low leakage rate
- Accurate positioning of valve stem to ensure temperature control
- Long service life
- Without accessories, it can be quickly installed with actuators

TECHNICAL PARAMETER	
SPECIFICATIONS	
Nominal pressure rating	PN20
Valve size	DN15 – DN50
Valve type	Three-way mixing
Flow characteristic	Equal percentage（A-AB） Linear (B-AB)
Leakage rate	A-AB leakage rate ≤0.01% of Kvs B-AB leakage rate ≤0.02% of Kvs
Rangeability	50:1
Applied medium	Hot and cold water, steam
Medium temperature	Water: -25~130°C Steam: -25~180°C
Stroke	DN15-DN20：10mm DN25：15mm DN32-DN50：20mm
Material	Stem Valve plug: stainless steel
Connection	screw thread（ISO7-1）
Action direction	The valve stem up to close A-AB

INSTALLATION

- Water should meet GB/T 29044-2012 water quality requirements of heating and air conditioning system.
- Flow direction must correspond with the arrow direction on the valve body
- Do not install valve with stem below the horizontal.
- The installation of a strainer is strongly recommended.

V5011S3 SERIES

Three-way threaded linear valve

ORDER INFORMATION AND TECHNICAL PARAMETERS

VALVE SPECIFICATIONS				ACTUATOR CLOSE-OFF PRESSURE（kPa）	
Order Number	Valve size	Medium	Kvs(m^3/h)	600N	1800N
V5011S3W015	DN15	Water	4	1100 (ML6420A3007-E ML7420A8088-E ML8824A0620 ML7425A8018-E)	1600 (ML7421A8035-E ML8824A1820)
V5011S3S015	DN15	Steam	4	1100 (ML8824A0620)	1600 (ML8824A1820)
V5011S3W020	DN20	Water	6.3	1100 (ML6420A3007-E ML7420A8088-E ML8824A0620 ML7425A8018-E)	1600 (ML7421A8035-E ML8824A1820)
V5011S3S020	DN20	Steam	6.3	1100 (ML8824A0620)	1600 (ML8824A1820)
V5011S3W025	DN25	Water	10	780 (ML6420A3007-E ML7420A8088-E ML8824A0620 ML7425A8018-E)	1600 (ML7421A8035-E ML8824A1820)
V5011S3S025	DN25	Steam	10	780 (ML8824A0620)	1600 (ML8824A1820)
V5011S3W032	DN32	Water	16	500 (ML6420A3007-E ML7420A8088-E ML8824A0620 ML7425A8018-E)	1600 (ML8824A1820)
V5011S3S032	DN32	Steam	16	500 (ML8824A0620)	1600 (ML8824A1820)
V5011S3W040	DN40	Water	25	300 (ML8824A0620)	950 (ML8824A1820)
V5011S3S040	DN40	Steam	25	300 (ML8824A0620)	950 (ML8824A1820)
V5011S3W050	DN50	Water	40	200 (ML8824A0620)	630 (ML8824A1820)
V5011S3S050	DN50	Steam	40	200 (ML8824A0620)	630 (ML8824A1820)

DIMENSIONS (mm)

Valve size	A	B	C	Y1 A-AB down	Weight kg
DN15	83	28.5	55	97	0.69
DN20	83	29.5	55	97	0.77
DN25	103	35.5	63	102	1.11
DN32	120	39.5	76.5	107	1.53
DN40	130	44.5	82.5	107	1.86
DN50	150	53.5	94	107	2.59

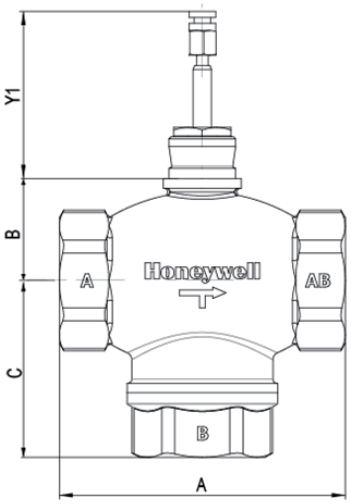

For more information
buildings.honeywell.com.cn

Honeywell Building Technology

China Head Quater
Building #1, 555 Huanke Road
Pudong New Area, Shanghai
+86 400-820-2233

HongKong / Macau Office
Unit 501, 5/F, Goldin Financial Global Centre
17 Kai Cheung Road, Kowloon Bay, Kowloon,
Hong Kong
T +852-23319133

HMT-BMS-V5011B.Series 2021 EN/V1
©2021 Honeywell International Inc.

THE
FUTURE
IS
WHAT
WE
MAKE IT

Honeywell