MANUAL BUTTERFLY VALVE

Wafer Type Motorized Valve

Butterfly Valves are a family of quarter-turn rotational motion valves that are used in pipelines to shut-off flow for Chiller and Hot Water.

FEATURES AND BENEFITS

- Size : DN50-DN700
- Body: Cast Iron (DN50-DN250)
- Body: Ductile Iron (DN300-DN700)
- Disc: Ductile Iron / Stainless Steel
- Connection Type: Wafer



SPECIFICATIONS

SPECIFICATIONS	
Medium	Water
Medium Temp	-10^{0}C to 110^{0}C
Nominal Pressure	PN16/PN25

STANDARDS AND CODES	
Design Std.	IS:13095
Testing Std.	IS:13095
Flange Std.	IS:1538/ISO:7005-2

TEST PRESSURE	
Shell Test	24 Bar (PN16), 37.5 Bar (PN25)
Seat Test	17.6 Bar (PN16), 27.5 Bar (PN25)

Honeywell

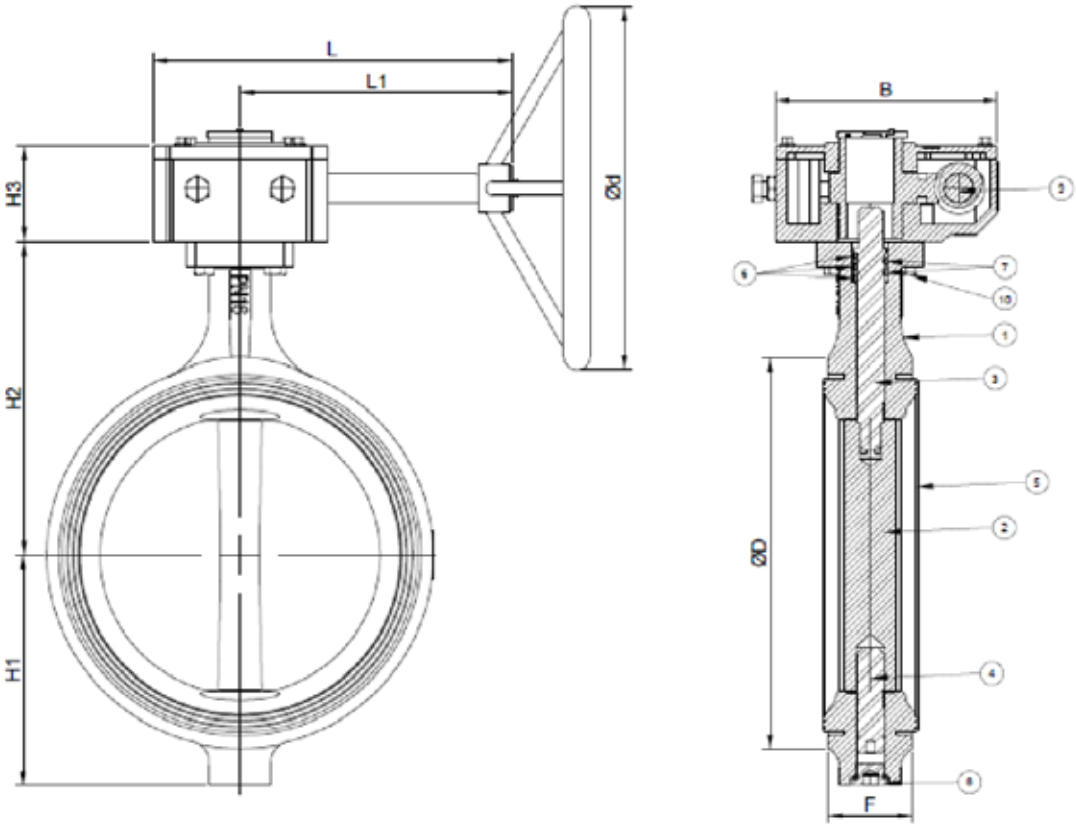

PART DESCRIPTIONS

SR. NO.	PART NAME	MATERIAL	SPECIFICATION	QTY
1	Body	Cast Iron/Ductile Iron	CI - IS:210 Gr. FG200 DI - 450/12	1
2	Disc	Ductile Iron/Stainless Steel	DI - 450/12 SS – SS304	1
3	Upper Stem	Stainless Steel	ASTM A276 Gr. SS410	1
4	Lower Stem	Stainless Steel	ASTM A276 Gr. SS410	1
5	Seat	Rubber	EPDM	1
6	Body Bush	PTFE	Nylon	3
7	O-Ring	Rubber	EPDM	3
8	Bottom Plug	Mild Steel (Chrome Plated)	----	1
9	Gear Box	Cast Iron	IS:210 Gr. FG200	1
10	Fasteners	Mild Steel	----	4

OUTSIDE DIMENSIONS (MM)

SIZE DN	H	H1	H2*	H3	L	L1	B	ØD	Ød
50	41.5	67	110	60	182	115	112	97	221
65	44.5	74	118	60	182	115	112	111	221
80	44.5	83	127	60	182	115	112	128	221
100	50.5	100	145	60	182	115	112	160	221
125	54.5	119	161	60	182	115	112	192	221
150	54.5	132	174	60	182	115	112	213	221
200	58.5	161	238	60	182	115	112	271	221
250	66.5	204	282	60	280	130	155	326	256

300	76.5	229	307	60	280	130	155	378	256
350	90.5	282	373	72	308	195	155	440	397
400	101.5	315	417	72	308	195	155	493	488
450	112.5	346	427	72	308	195	155	542	515
500	125.5	375	475	72	308	195	155	598	515
600	152.5	443	555	72	308	195	155	700	515
700	165	480	580	90	510	420	200	770	515

** For Extended stems H2 = H2 in the table + Neck length (50MM/100MM/150MM)*

SIZE	KVS AT DISC OPENING ANGLE								
	10°	20°	30°	40°	50°	60°	70°	80°	90°
50	0.1	5	12	24	45	64	90	115	125
65	0.2	8	20	37	65	98	144	196	204
80	0.3	12	22	39	70	116	183	275	302
100	0.5	17	36	78	139	230	364	546	600
125	0.8	29	61	133	237	392	620	930	1022
150	2	45	95	205	366	605	958	1437	1579
200	3	89	188	408	727	1202	1903	2854	3136
250	4	151	320	694	1237	2047	3240	4859	5340
300	5	324	495	1072	1911	3162	5005	7507	8250
350	6	338	715	1549	2761	4568	7230	10844	11917
400	8	464	983	2130	3797	6282	9942	14913	16388
450	11	615	1302	2822	5028	8320	13168	19752	21705
500	14	791	1674	3628	6465	10698	16931	25396	27908
600	22	1222	2587	5605	9989	16528	26175	39236	43116
700	30	1663	3522	7630	12599	20036	30482	46899	58696

NOMENCLATURE OF THE VALVE

Manual Butterfly Valve (Gearbox Operated) with DI Disc

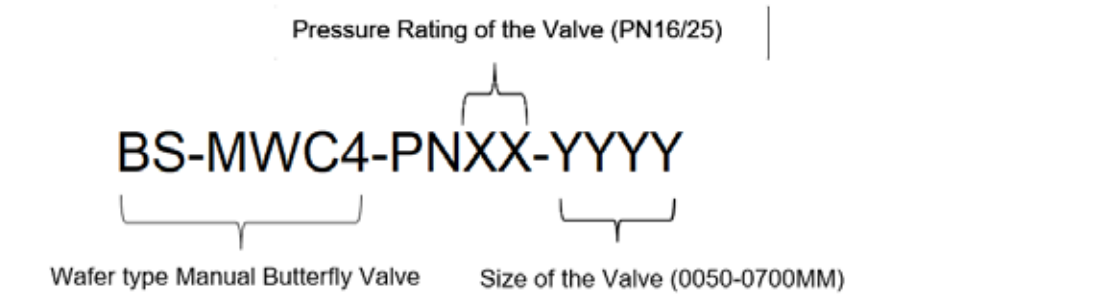

Example: BS-MWC4-PN16-0150 - Manual Butterfly Valve, Gearbox Operated, CI Body, DI Disc, PN16, DN150

Manual Butterfly Valve (Gearbox Operated) with SS Disc

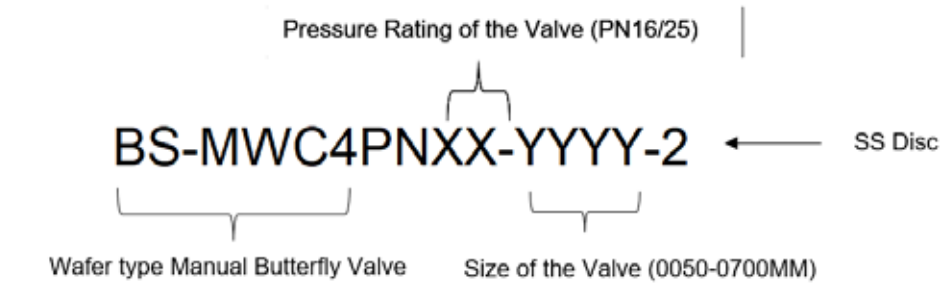

Example: BS-MWC4PN16-0150-2 - Manual Butterfly Valve, Gearbox Operated, CI Body, SS Disc, PN16, DN150

Extended Stem Manual Butterfly Valve (Gearbox Operated) with DI disc

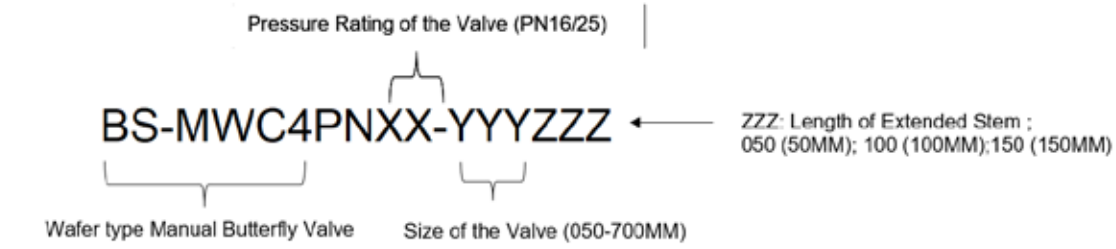

Example: BS-HWC4PN16-150050 - Manual Butterfly Valve, Gearbox Operated, CI Body, DI Disc,PN16,DN150,50 mm extended Stem

FLANGE STANDARDS

Flange details as per IS: 1538

SR. NO.	VALVE SIZE (MM)	OD	PCD	HOLE DIA	NO. OF HOLES
1	50	165	125	19	4
2	65	185	145	19	4
3	80	200	160	19	4
4	100	220	180	19	4
5	125	250	210	19	8
6	150	285	240	23	8
7	200	340	295	23	8
8	250	395	350	23	12
9	300	445	400	23	12
10	350	505	460	23	16
11	400	565	515	28	16
12	450	615	565	28	20
13	500	670	620	28	20
14	600	780	725	31	20
15	700	895	840	31	24

Flange details as per ISO: 7005-2

SR. NO.	VALVE SIZE (MM)	OD	PCD	HOLE DIA	NO. OF HOLES
1	50	165	125	19	4
2	65	185	145	19	4
3	80	200	160	19	8
4	100	220	180	19	8
5	125	250	210	19	8
6	150	285	240	23	8
7	200	340	295	23	12
8	250	405	355	28	12
9	300	460	410	28	12
10	350	520	470	28	16
11	400	580	525	31	16
12	450	640	585	31	20
13	500	715	650	34	20
14	600	840	770	37	20
15	700	910	840	37	24

For more information,
https://honeywellbuildings.in
Tel : +91 124 4975000
Email: HBT-Indiabuildings@honeywell.com

Honeywell HBT India Buildings
Unitech Trade Center, 5th Floor, Sector-43,
Block C, Sushant Lok Phase - I,
Gurgaon - 122 002. Haryana India
https://www.honeywellbuildings.in/

© 2023 Honeywell International Inc.

THE FUTURE IS WHAT WE MAKE IT

Honeywell